REVISIONS			
REV	DESCRIPTION	DATE	APPROVED
A	INITIAL RELEASE	10/31/2026	NUTTY

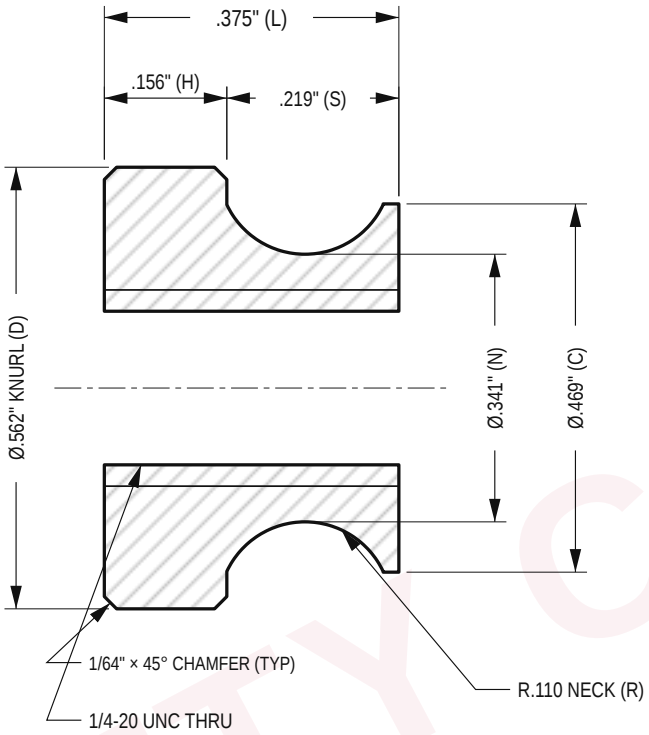

SECTION A-A

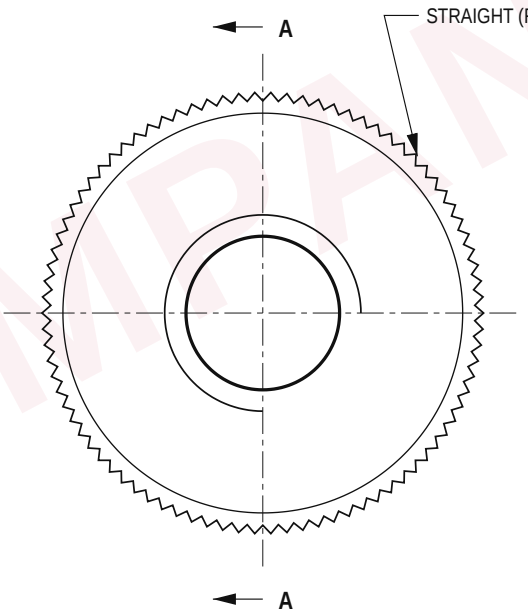

END VIEW

SPECIFICATIONS	
MATERIAL	BRASS
FINISH	PLAIN (NATURAL BRASS)
THREAD	1/4-20 UNC
KNURL DIA. (D)	0.562"
OVERALL LENGTH (L)	0.375"
HEAD THICKNESS (H)	0.156"
SHOULDER LENGTH (S)	0.219"
COLLAR DIA. (C)	0.469"
NECK DIA. (N)	0.341"
NECK RADIUS (R)	0.110"

NOTES:

1. ALL DIMENSIONS ARE IN INCHES; NOMINAL, FROM MANUFACTURER PRODUCTION DRAWINGS.
2. ROUND HEAD WITH STRAIGHT (FLAT) KNURL FOR A SURE, TOOL-FREE FINGER GRIP.
3. 1/64" X 45° CHAMFERS ON HEAD EDGES.
4. PARTS ARE FREE OF SHARP EDGES, BURRS AND OTHER DEFECTS.
5. HAND TIGHTEN ONLY. BRASS IS SOFT; DO NOT USE WRENCHES OR PLIERS.



PRODUCT PHOTO (REF.)

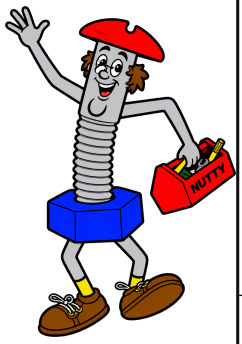

UNLESS OTHERWISE SPECIFIED:

DIMENSIONS ARE IN INCHES
DECIMALS: NOMINAL PER MFR. DRAWING
1/64" X 45° CHAMFERS
THREAD: UNIFIED INCH (UNC / UNF)

THIRD ANGLE

THE NUTTY INC COMPANY
FASTENER SPECIALISTS SINCE 1977
19 Seemans Lane, Milford, CT 06460
203.877.1709 • sales@nutty.com • nutty.com

TITLE

1/4"-20 BRASS KNURLED THUMB NUT

SOLID BRASS • ROUND HEAD • FLAT KNURL

PART NO.

BKN1420

SIZE	SCALE	UNITS	WEIGHT	DRAWN	DATE	SHEET
A	NTS	INCH	–	NUTTY	10/31/2026	1 OF 1

NUTTY COMPANY