PART # GLA55341030

DESCRIPTION: 3/4"-10 x 30" Galvanized L Anchor Bolt

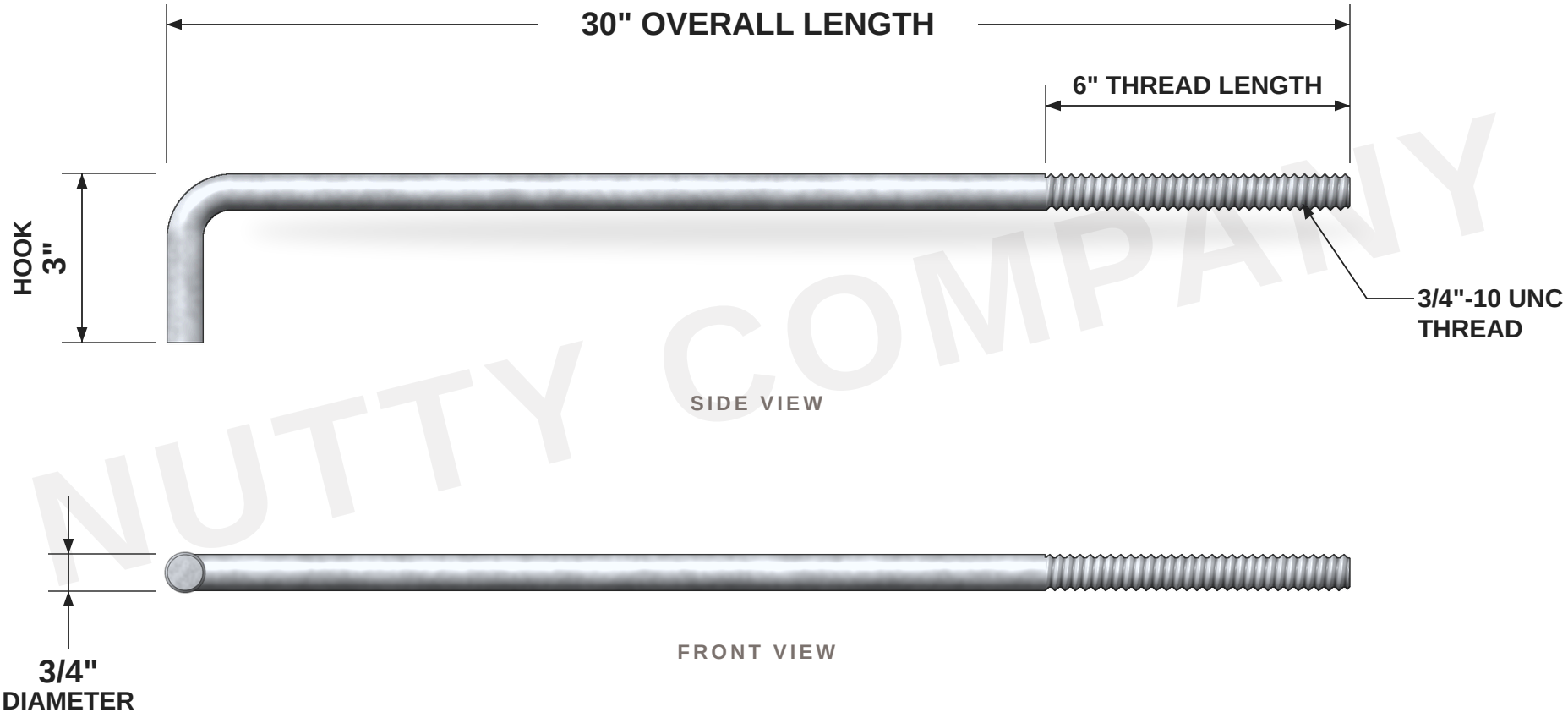

NUTTY COMPANY

THE NUTTY COMPANY INC
FASTENER SPECIALISTS SINCE 1977

www.nutty.com

19 Seemans Lane, Milford, CT 06460
203.877.1709 | 1.800.4NUTTY.1 | Fax 203.735.1097
sales@nutty.com

MATERIAL:
ASTM F1554 GRADE 55 STEEL

FINISH:
HOT-DIP GALVANIZED
ASTM A153 / ASTM F2329

1. ALL DIMENSIONS ARE IN INCHES
2. TOLERANCES: .XX = ± .03 .XXX = ± .015
3. NUTS & WASHERS NOT INCLUDED
4. MADE IN THE U.S.A.

PART # **GLA55341030**

DESCRIPTION:
3/4"-10 x 30" Galvanized L Anchor Bolt
ASTM F1554 Grade 55 · Hot-Dip Galvanized



SCALE: **NTS**	UNITS: **INCH**	DATE: **10/22/2026**	SHEET: **1 OF 1**