REVISIONS			
REV	DESCRIPTION	DATE	APPROVED
A	INITIAL RELEASE	10/30/2026	NUTTY

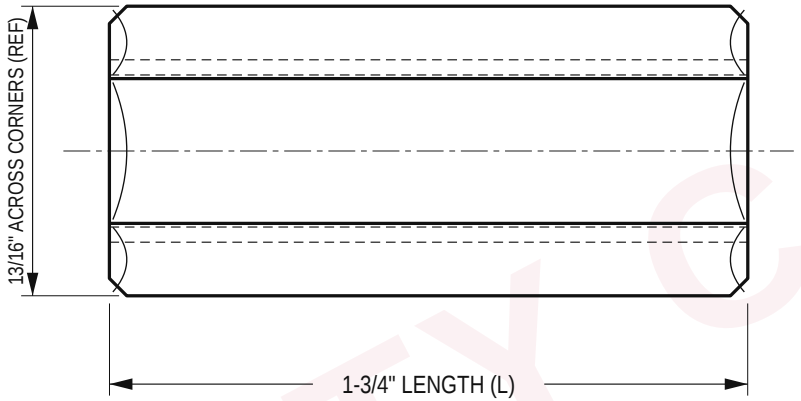

SIDE VIEW

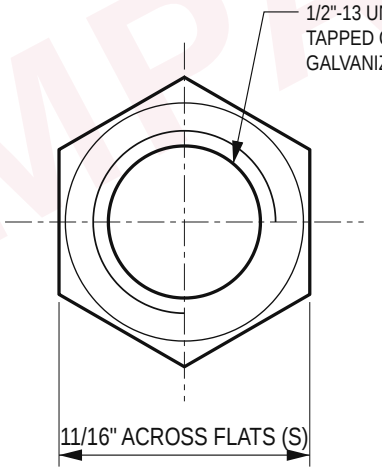

END VIEW

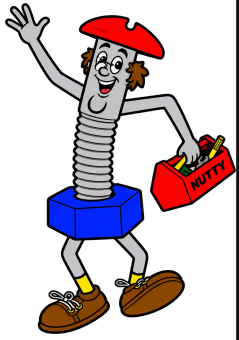

SPECIFICATIONS	
MATERIAL	CARBON STEEL, ASTM A563 GRADE A
FINISH	HOT-DIP GALVANIZED, ASTM A153 / ASTM F2329
THREAD (D)	1/2"-13 UNC-2B, TAPPED OVERSIZE
ACROSS FLATS (S)	11/16"
LENGTH (L)	1-3/4"
THREAD LENGTH	FULL LENGTH (THRU)
PROOF LOAD STRESS	75,000 PSI (A563 GR A, HDG)
MATES WITH	1/2"-13 HDG ROD, BOLTS & STUDS
USE	JOIN TWO THREADED RODS / EXTEND STUDS

NOTES:

1. ALL DIMENSIONS ARE IN INCHES; NOMINAL.
2. HOT-DIP GALVANIZED COUPLING NUTS ARE TAPPED OVERSIZE AFTER GALVANIZING PER ASTM A563 TO FIT HOT-DIP GALVANIZED THREADS.
3. THREAD EACH ROD OR BOLT IN TO ABOUT HALF THE NUT LENGTH SO BOTH ENDS HAVE EQUAL ENGAGEMENT.
4. REFER TO THE MILL TEST REPORT (MTR) FOR WIDTH ACROSS FLATS AND LENGTH TOLERANCES.
5. ACROSS-CORNERS DIMENSION IS FOR REFERENCE ONLY.

UNLESS OTHERWISE SPECIFIED:

DIMENSIONS ARE IN INCHES
ACROSS FLATS & LENGTH: SEE MTR
THREAD: UNC, TAPPED OVERSIZE (A563)
COATING PER ASTM A153 / F2329

THIRD ANGLE

THE NUTTY COMPANY INC
FASTENER SPECIALISTS SINCE 1977
19 Seemans Lane, Milford, CT 06460
203.877.1709 • sales@nutty.com • nutty.com

TITLE

1/2"-13 X 1-3/4" GALVANIZED HEX ROD COUPLING NUT

HOT-DIP GALVANIZED • ASTM A563 GRADE A

PART NO.

GRC1213

SIZE	SCALE	UNITS	WEIGHT	DRAWN	DATE	SHEET
A	NTS	INCH	–	NUTTY	10/30/2026	1 OF 1

NUTTY COMPANY