THE NUTTY COMPANY INC
FASTENER SPECIALISTS SINCE 1977

19 Seemans Lane • Milford, CT 06460 USA
**203.877.1709** • 1.800.4NUTTY.1 • Fax 203.735.1097
sales@nutty.com • www.nutty.com

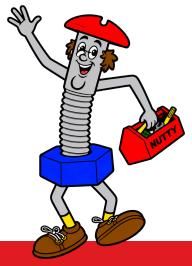

PRODUCT DATA SHEET

# Stainless Extra Thick Flat Washers – 18-8

## 1.0 Dimensions Inches

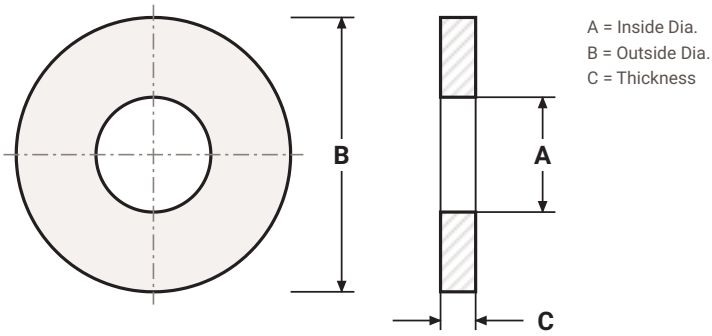


A = Inside Dia.
B = Outside Dia.
C = Thickness



| Nom. Bolt Size | Inside Diameter (A) | Outside Diameter (B) | Thickness (C) | Approx. Wt. per 100 (lb) | Nutty Stock # |
|---|---|---|---|---|---|
| 1/4" | 0.281 | 5/8" (0.625) | 11/64" (0.172) | 1.22 | XHFW14 |
| 5/16" | 0.344 | 3/4" (0.750) | 11/64" (0.172) | 1.73 | XHFW516 |
| 3/8" | 0.406 | 7/8" (0.875) | 11/64" (0.172) | 2.35 | XHFW38 |
| 1/2" | 0.531 | 1-1/4" (1.250) | 3/16" (0.188) | 5.46 | XHFW12 |
| 5/8" | 0.656 | 1-1/2" (1.500) | 3/16" (0.188) | 7.76 | XHFW58 |
| 3/4" | 0.812 | 1-7/8" (1.875) | 1/4" (0.250) | 16.21 | XHFW34 |
| 7/8" | 0.938 | 2" (2.000) | 1/4" (0.250) | 17.71 | XHFW78 |
| 1" | 1.062 | 2" (2.000) | 1/4" (0.250) | 16.30 | XHFW1 |

I.D. is nominal; O.D. and thickness nominal with decimal equivalents. Weights are approximate (18-8 stainless). Drawing not to scale.

## 2.0 Material & Properties

| | |
|---|---|
| **Material** | 18-8 stainless steel (304 family) |
| **Finish** | Plain, passivated |
| **Magnetism** | Non-magnetic to slightly magnetic (cold working) |
| **Pattern** | Extra thick flat washer (see table) |
| **RoHS** | RoHS 3 (2015/863/EU) compliant |

## 3.0 Application

- Extra thick: much thicker than standard flat washers, so they won't bend, dish or cup under heavy clamping loads.
- 18-8 stainless resists rust in outdoor, wet and marine locations – use with stainless bolts, nuts and threaded rod.
- Common as spacers, under heavy loads, over oversized or slotted holes, on machinery bases, docks and wood framing.

**Disclaimer:** The above is a compilation of data from various industry standards. The Nutty Company, Inc. has made every effort to present the data accurately. However, The Nutty Company, Inc. cannot be held liable for any claim traceable to any errors, typographical or otherwise, contained herein.



**Need 316 stainless or a size you don't see?**
Call 203.877.1709 or email sales@nutty.com