# PART # TRAC6346

**DESCRIPTION:** 3/4"-6 x 6' ACME Threaded Rod
**DIAMETER:** 3/4"
**THREAD:** 3/4"-6 ACME, Class 2G, Right Hand
**THREAD TYPE:** Rolled Thread
**LENGTH:** 6' (72")
**MATERIAL:** AISI 1018 Low Carbon Steel
**FINISH:** Plain

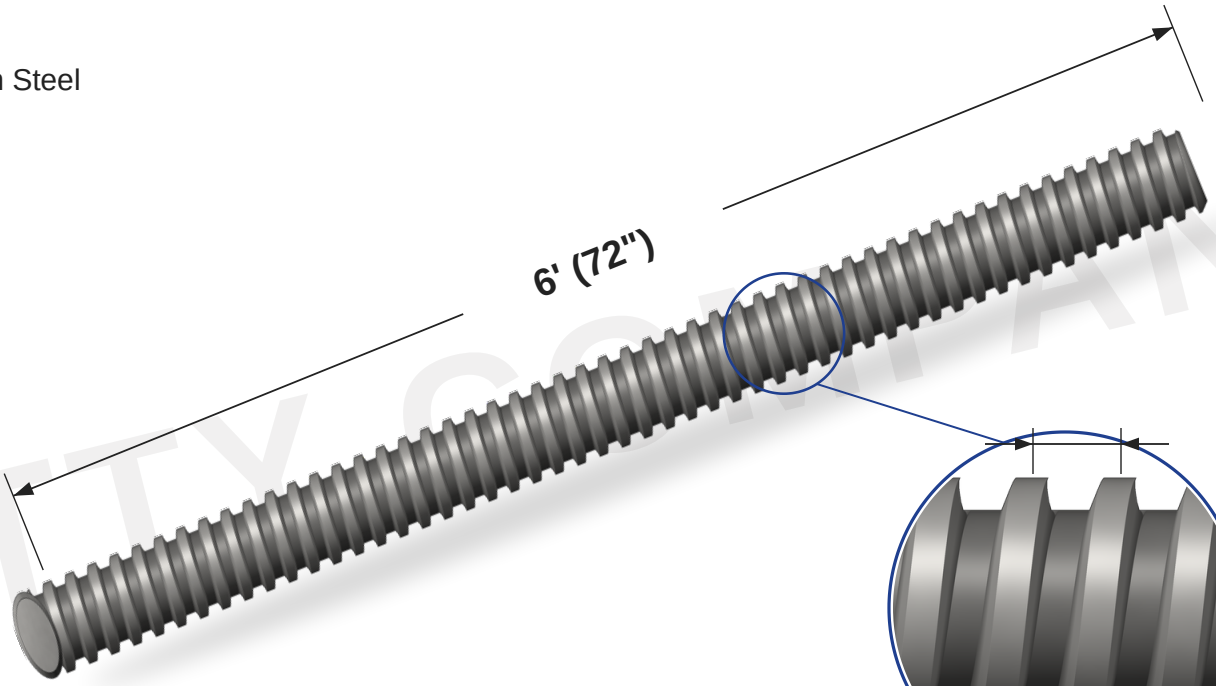


END VIEW

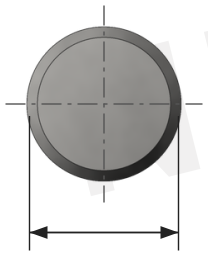

**3/4"**
**DIAMETER**



**3/4"-6 ACME**
**PITCH 1/6"**
**(6 TPI)**
**29° ACME FORM**
**CLASS 2G · RH**
**ROLLED THREAD**

DETAIL A · THREAD (ENLARGED)

NUTTY COMPANY

THE NUTTY COMPANY INC
FASTENER SPECIALISTS SINCE 1977

www.nutty.com

19 Seemans Lane, Milford, CT 06460
203.877.1709 | 1.800.4NUTTY.1 | Fax 203.735.1097
sales@nutty.com

**MATERIAL:**
AISI 1018 STEEL

**FINISH:**
PLAIN

1. ALL DIMENSIONS ARE IN INCHES
2. TOLERANCES: .XX = ± .03 .XXX = ± .015
3. ACME 2G, RIGHT HAND, ROLLED THREAD
4. 29° INCLUDED THREAD ANGLE
5. CUSTOM LENGTHS AVAILABLE, CONTACT US
6. MADE IN THE U.S.A.

PART # **TRAC6346**

**DESCRIPTION:**
**3/4"-6 x 6' ACME Threaded Rod**
AISI 1018 Steel · ACME 2G Right Hand



| SCALE: **NTS** | UNITS: **INCH** | DATE: **10/22/2026** | SHEET: **1 OF 1** |
|---|---|---|---|