PART # TRAC6786

DESCRIPTION: 7/8"-6 x 6' ACME Threaded Rod
DIAMETER: 7/8"
THREAD: 7/8"-6 ACME, Class 2G, Right Hand
THREAD TYPE: Rolled Thread
LENGTH: 6' (72")
MATERIAL: AISI 1018 Low Carbon Steel
FINISH: Plain

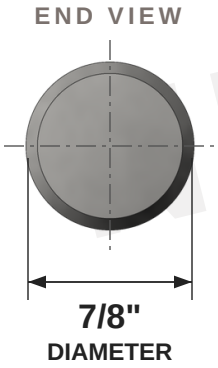

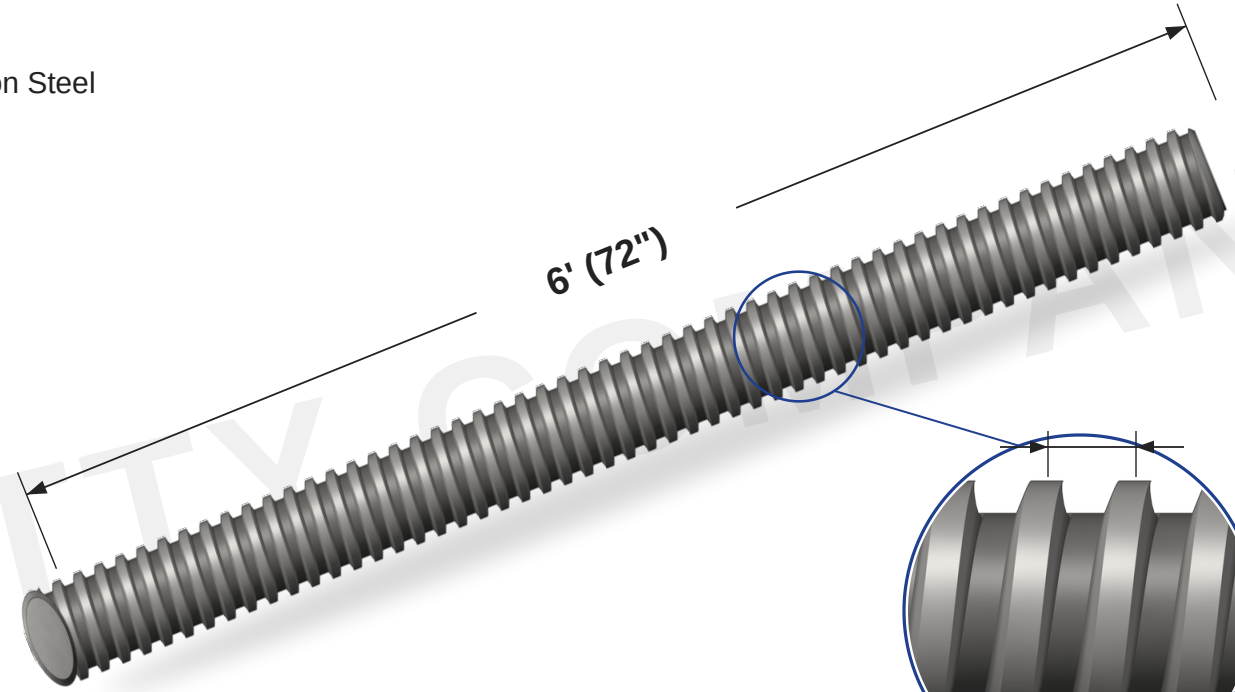

7/8"-6 ACME
PITCH 1/6"
(6 TPI)
29° ACME FORM
CLASS 2G · RH
ROLLED THREAD

DETAIL A · THREAD (ENLARGED)

NUTTY COMPANY

THE NUTTY COMPANY INC
FASTENER SPECIALISTS SINCE 1977
www.nutty.com
19 Seemans Lane, Milford, CT 06460
203.877.1709 | 1.800.4NUTTY.1 | Fax 203.735.1097
sales@nutty.com

MATERIAL:
AISI 1018 STEEL

FINISH:
PLAIN

1. ALL DIMENSIONS ARE IN INCHES
2. TOLERANCES: .XX = ± .03 .XXX = ± .015
3. ACME 2G, RIGHT HAND, ROLLED THREAD
4. 29° INCLUDED THREAD ANGLE
5. CUSTOM LENGTHS AVAILABLE, CONTACT US
6. MADE IN THE U.S.A.

PART # **TRAC6786**

DESCRIPTION:
7/8"-6 x 6' ACME Threaded Rod
AISI 1018 Steel · ACME 2G Right Hand



SCALE: **NTS**	UNITS: **INCH**	DATE: **10/22/2026**	SHEET: **1 OF 1**